OXIDAL
your_project_partner



art. 380

Balustrade oblique clamp

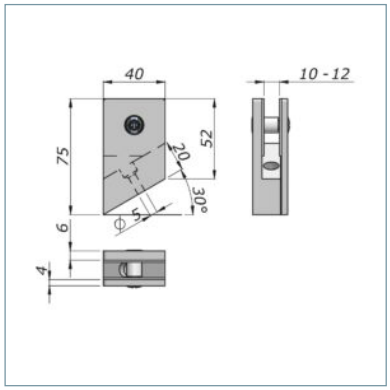

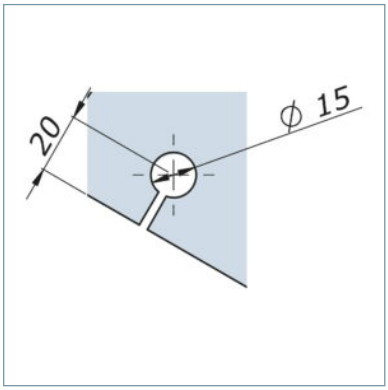

specifiche tecniche / technical data

argento / silver	bronzo / bronze	oro / gold	nero / black	verniciato / powder	cromato / chrome	oro luc. / bright gold	crom. sat / chro. mat
N-0380-A	N-0380-B	N-0380-O	N-0380-N	N-0380-V	N-0380-C	N-0380-L	N-0380-I

NUOVA OXIDAL srl

Via Milano, 44,
20011 Corbetta MI
Italy

02.97273093
02.97273280
02.97272719

info@nuovaoxidal.com
nuovaoxidal.com