OXIDAL
your_project_partner



art. 302

Top pivot for Art. 106 (DX = destro - right / SX = s

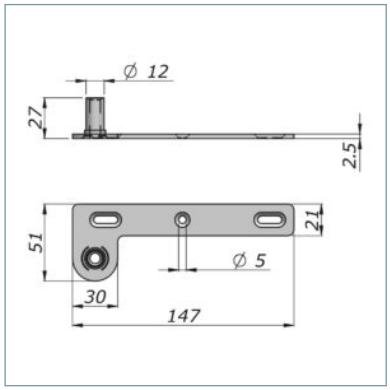

specifiche tecniche / technical data

	argento / silver
destra/right	N-0302-A-DX
sinistra/left	N-0302-A-SX

NUOVA OXIDAL srl

Via Milano, 44,
20011 Corbetta MI
Italy

02.97273093
02.97273280
02.97272719

info@nuovaoxidal.com
nuovaoxidal.com