OXIDAL
your_project_partner



# art. AC-02

Vertical hinge with double flat boss

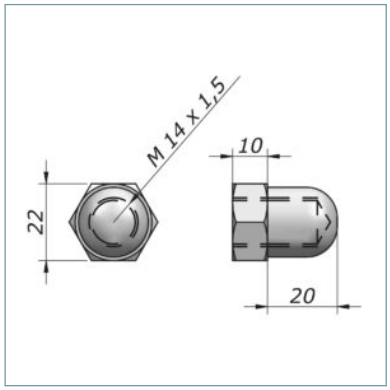


specifiche tecniche / technical data

M-AC02-A

NUOVA OXIDAL srl

Via Milano, 44,
20011 Corbetta MI
Italy

02.97273093
02.97273280
02.97272719

info@nuovaoxidal.com
nuovaoxidal.com